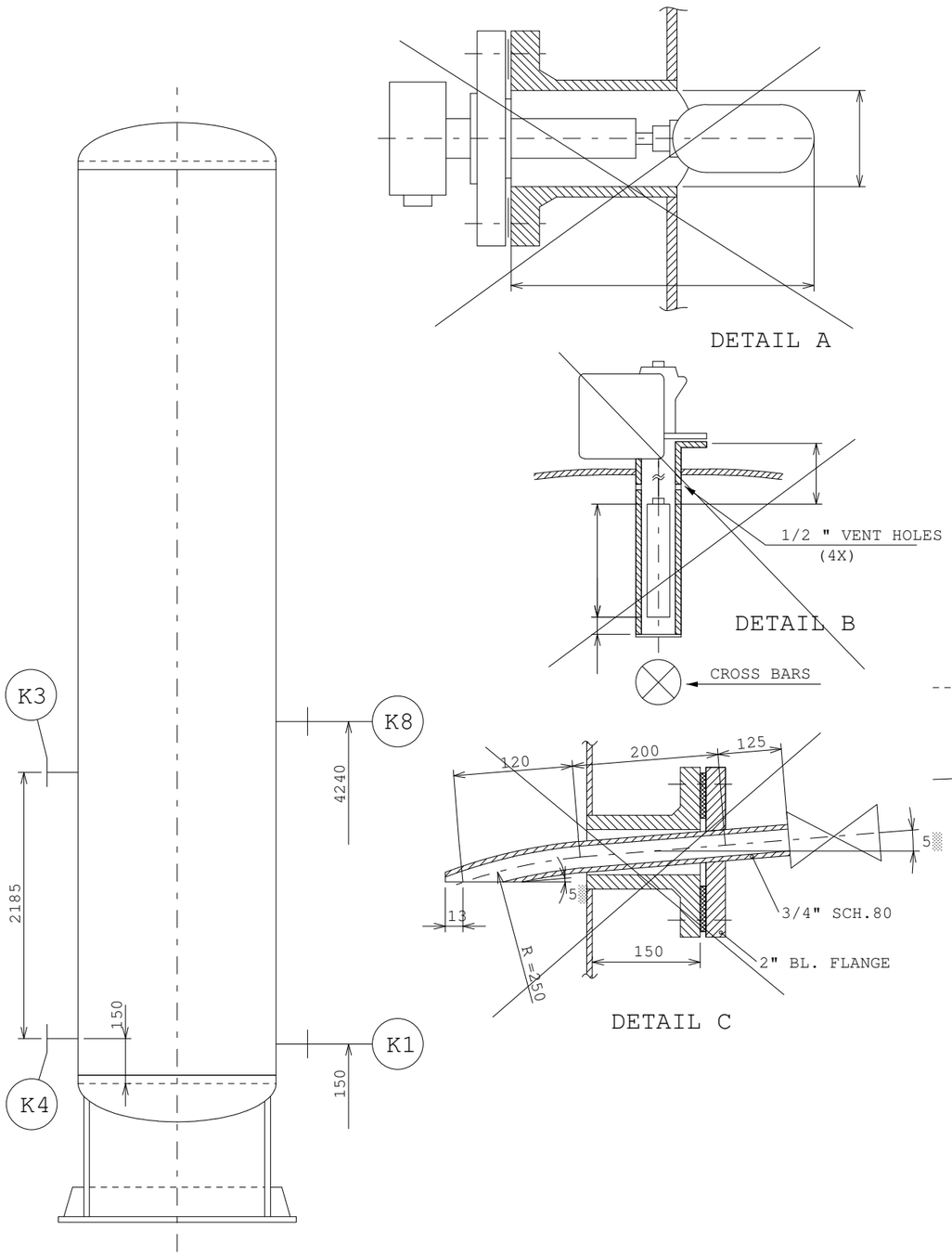

SPECIAL NOTE:

ACTUAL STANDPIPE DESIGN REGARDING CONSTRUCTION OF BRANCHES AND CONNECTIONS TO BE IN ACCORDANCE WITH PIPING SPECIFICATION OF THE PROJECT INVOLVED.

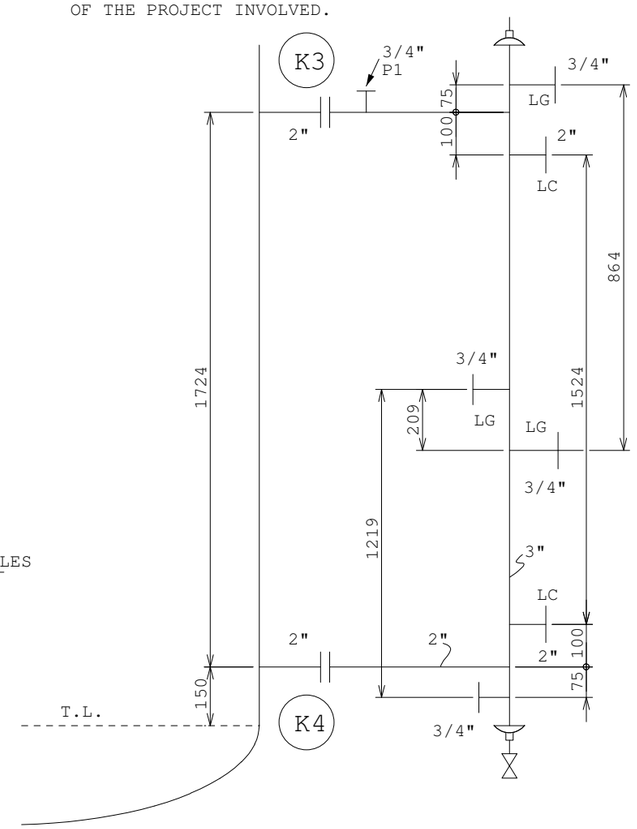

DESCRIPTION	SIZE	TYPE	RATING	QTY.	REMARKS
K16	1 1/2"	R.F.	150#		T.W.
K15					
K14					
K13					
K12					
K11					
K10					
K9	1 1/2"				
K8	2"				S.V.
K7	1 1/2"				T.W.
K4	2"	R.F.	150#		STAND
K3	2"	,,	,,	1	PIPE
K1	1 1/2"	R.F.	150#	1	T.W.

GENERAL NOTE:

ALL DIMENSIONS IN MM., UNLESS OTHERWISE NOTED.

0 1 2 3 4 5 6 7 8 9 10 11 12 13 14 15 16 17 18 19 20

NEW DWG NO: BN-DG-K1-14

NOTES ADDITIONAL TO INSTRUMENT CONNECTIONS, ALREADY SHOWN ON SKETCH.

ACTION BY VESSEL DEPARTMENT.
ACTION BY PIPING DEPARTMENT.

○ ○ THERMOWELLS ARE LOCATED IN DOWNCOMER OF TRAYS:

● ● THERMOWELLS LOCATED ABOVE TRAYS: 60,50,35,30 30,20,10

● ○ CHECK CLEARANCE OF THERMOWELLS (DESIGN IS BASED ON)
THERMOWELL IMMERSION:
AND NOZZLE STAND-OUT:

○ ○ CHECK CLEARANCE FOR INTERNAL LEVEL ALARM BALL-FLOAT (SEE DETAIL A) FOR:

○ ○ CHECK CLEARANCE FOR INTERNAL LEVEL CONTROLLER FLOAT; SPECIAL LARGE SCALE DRAWING TO BE USED FOR CHECKING. (SEE DETAIL B) FOR:

○ ○ STILLING PIPE TO BE PROVIDED BY VESSEL VENDOR FOR:
SEE SKETCH:

○ ○ PIPING TO PROVIDE PURGE PIPE FOR FOLLOWING CONNECTIONS:
(SEE DETAIL C): NO CALMING BAFFLE REQUIRED.

○ ○ PROVIDE BRACKET FOR STAND PIPE.

Iss	Date	By	Description of issue	Ch'k'd	App'd
II			Sheet no changed		
I			Certified		

EQUIPMENT DRAWING : /ISSUE:
PROCESS SKETCH : /ISSUE:
FLOW SHEET : /ISSUE:

THIS SKETCH NOT TO BE USED FOR CONSTRUCTION.

This drawing is not to be used for construction or for ordering material unless dated and signed

Certified
Date 28 AUG. 1967

Scale /

Approvals			
Design	Eng'r		

DWG.NO. BNS-3724M sheet 30 | Issue II | A3